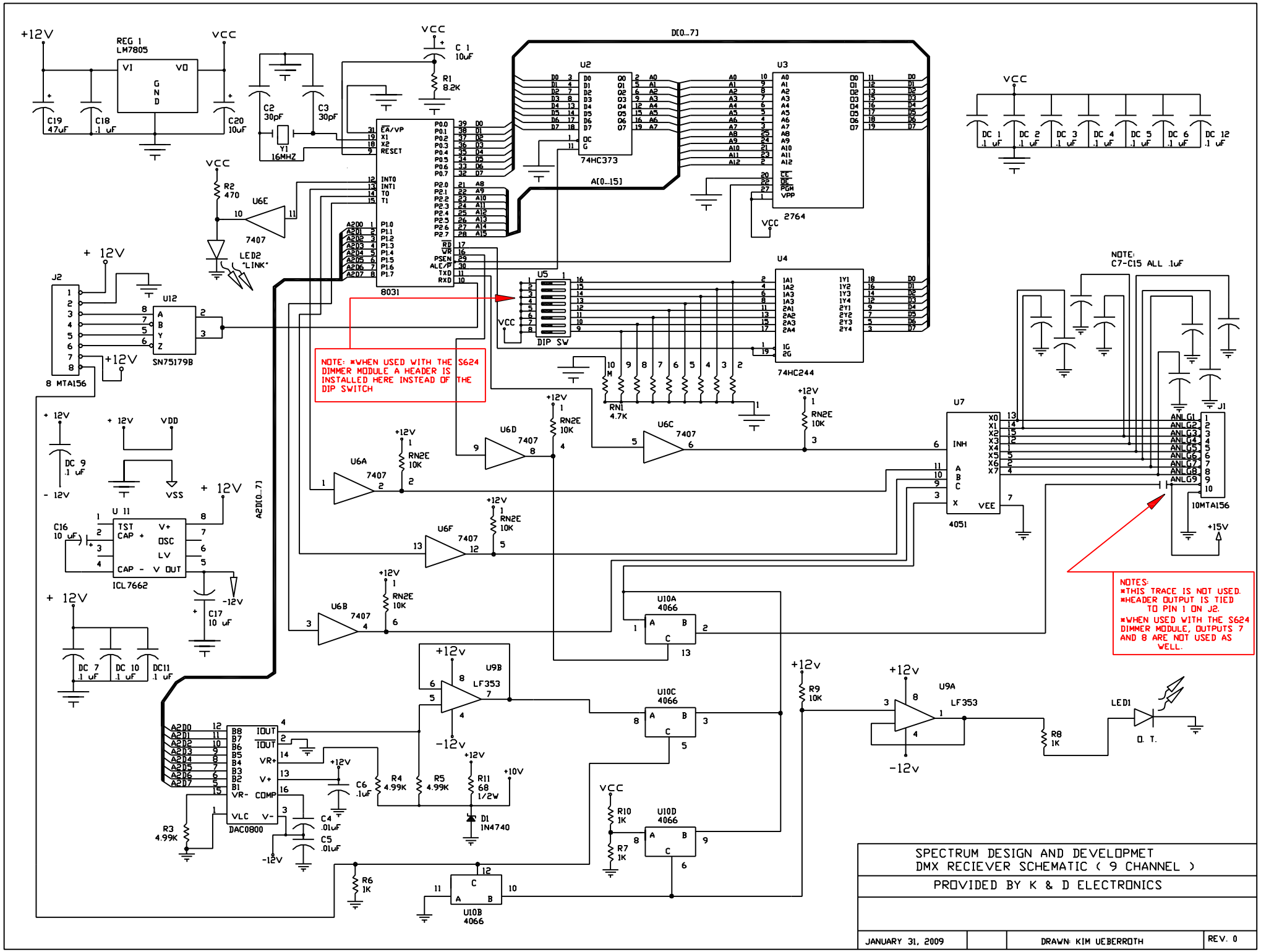
SPECTRUM DESIGN AND DEVELOPMET
DMX RECIEVER SCHEMATIC (9 CHANNEL)
PROVIDED BY K & D ELECTRONICS
JANUARY 31, 2009
DRAWN: KIM UEBERROTH
REV. 0
NOTE: *WHEN USED WITH THE S624 DIMMER MODULE A HEADER IS INSTALLED HERE INSTEAD OF THE DIP SWITCH
NOTES:
*THIS TRACE IS NOT USED.
*HEADER OUTPUT IS TIED TO PIN 1 ON J2.
*WHEN USED WITH THE S624 DIMMER MODULE, OUTPUTS 7 AND 8 ARE NOT USED AS WELL.
NOTE:
C7-C15 ALL .1uF
REG 1
LM7805
8031
74HC373
2764
74HC244
DIP SW
SN75179B
8 MTA156
ICL7662
DAC0800
LF353
4066
4051
10MTA156
LED2
"LINK"
LED1
O. T.
D[0...7]
A[0...15]
A2D[0...7]